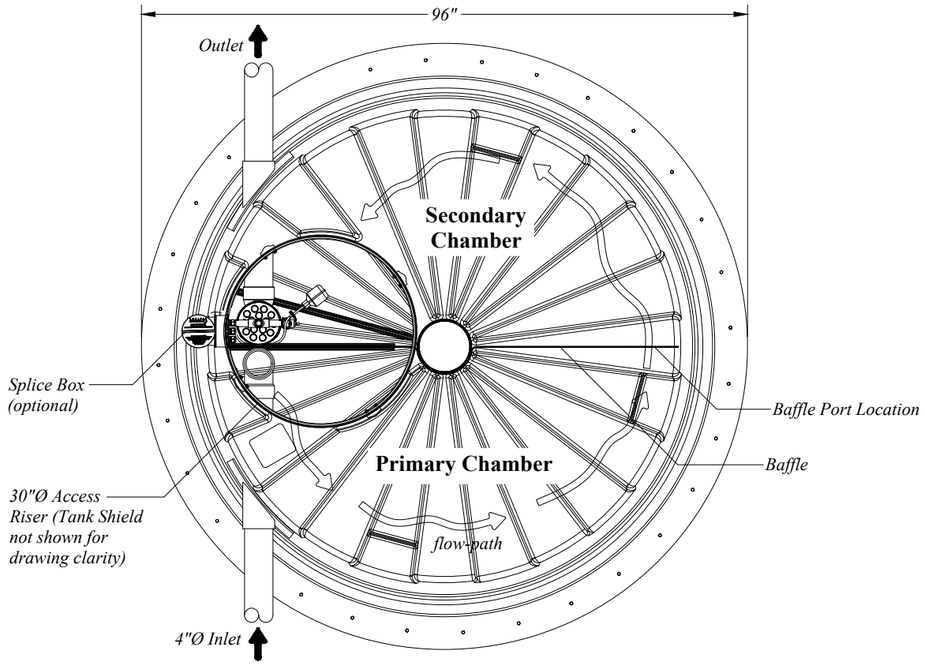

M1000 Top Detail
Scale: 1" = 2'-0"

General Notes:

Tank Volumes: Total Volume: 1220 gal±
Nominal Volume: 1000 gal± @ 48"
Unit volume at typical Operating Depth : 20 gal./in.±

Loads: Top = 500 psf minimum
Lateral Load = 62.4 pcf, EFP
Concentrated Wheel Load = 2500 lb.
The septic tank shall be capable of withstanding long-term hydrostatic loading, in addition to the soil loading, due to a water table maintained at ground surface.
Soil Bearing = 1000 psf (re-evaluate support base if soil bearing is less or unequal)

Method of calcuations:
1. Tanks shall be analyzed using strength design methods and finite element analysis for buried structures.
2. Calculations shall address the following:
- strength
- buckling
- deflection of 0.5 - 1% of the tank diameter, based on service load (including long-term deflection lag)
- buoyancy

3. Performance testing shall include vacuum testing followed by a hydrostatic test.

Material: Resin: polydicyclopentadiene

The properties listed here along with the minimum thickness as shown in the details are considered design minimums that must be maintained during the manufacturing of the tanks. The primary strength properties are listed below:

Property	DCPD
Flexural modulus E_f	274,000 psi
Tensile strength F_t	6,700 psi
Flexural strength F_b	10,500 psi

Property	DCPD
Compressive strength F_c	9,200 psi
Shear In-Plane F_s	7,180 psi
Flexural Rigidity	585 psi

Poisson ratio = 0.400 (Any permanent metal part shall be 300 series stainless steel.)

Installation: Installation, bedding, compaction, etc., shall be in "strict" compliance with the manufacturers standards and state or local rules and or guidelines. All tanks shall be set level on a minimum 4 inch thick compacted sand or approved granular bedding overlying a firm uniform base. The base shall be stable and uniform in order to ensure equal bearing across the tank bottom. Installations with 18 inches or less of ground cover may require additional buoyancy considerations as described in the manufacturers instructions. A minimum cover of 12 inches is required over the tank in areas subject to occasional light wheel loads. Refer to installation instructions Document NIM-LOS-1.

Test: Tanks shall be tested and certified watertight per manufacturers recommendations and or any prevailing rules or guidelines, whichever is more restrictive.

Tank Markings: Place marking on the upper most surface over the outlet.
Nominal Liquid capacity: 1000 gal. ±
Max burial depth: 5ft.
Max traffic (wheel): 2500 lbs.
Date manufactured:
Permit no.:

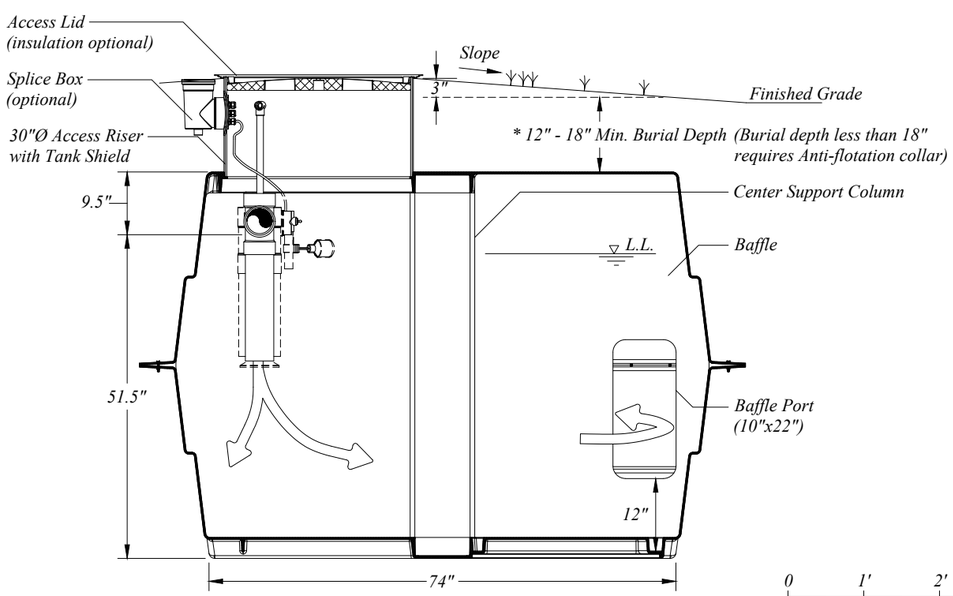

M1000 Tank Side Detail
Scale: 1" = 2'-0"

Graphic Scale

Inside Height Inches	Total Gallons
60	1217
54	1124
48	1006
42	881
36	744
30	601
24	460
18	324
12	200
6	83
0	0

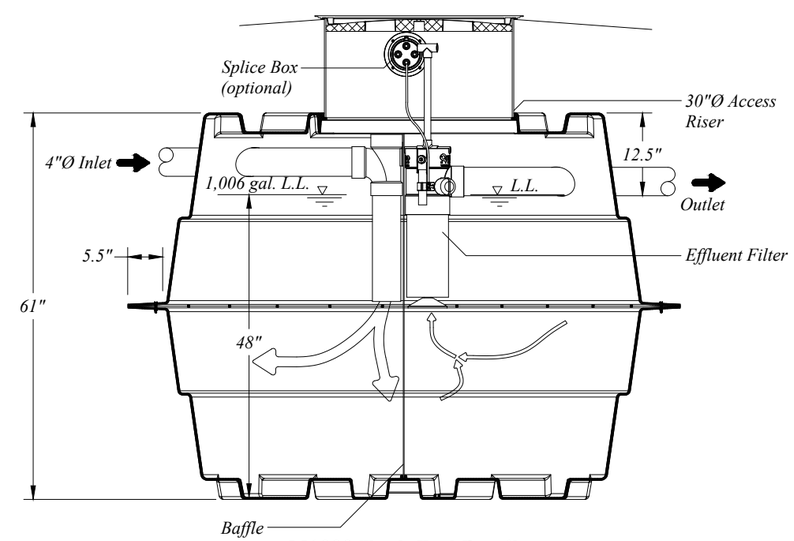

M1000 Tank End Detail
Scale: 1" = 2'-0"

Orenco SYSTEMS

Disclaimer: This Proposed System Configuration Drawing is provided solely as a design aid and illustrates one possible configuration of a system that would comply with Orenco's design criteria for the requirements and/or specifications that have been communicated to Orenco (based on third-party standards testing protocols and performance reports, as applicable). Design decisions, including the actual layout and configuration of the system and its viability for the project, are at the sole discretion of the systems's designer.

Meander Tank 1000 Gravity with Effluent Filter

DESIGN AID

Drawn By:	BAS / CSJ	Scale:	1" = 2'-0"
Reviewed By:	DN / TB	Sheet:	1 OF 1
File Name:	NDW-TD-MEA-100-3.DWG	Rev: 5.0	Date: 12/16/2022